Technical Datasheet

Product Code: **237ETHBSM**

Product Description: **Arley Eazee Thermostatic Bath Shower Mixer**

Specification

Barcode:	7081243314287
Material:	Brass
Handle Type:	Dial
Tap Pressure:	Low - High Pressure
Min Operating Pressure:	0.2 Bar
Waste Included:	No
Number Of Tap Holes:	2
Approvals:	TMV2 Approved
Projection (mm):	110
Flow Rate 0.1 Bar (L/min):	6.5
Flow Rate 0.5 Bar (L/min):	9
Flow Rate 1 Bar (L/min):	12
Flow Rate 2 Bar (L/min):	18.5
Flow Rate 3 Bar (L/min):	22.5
Colour:	Chrome

Key Features

- Wide-ranging bathroom brassware collection with modern expressive design
- Manufactured from high quality brass
- Coated in a luxury chrome finish
- Features automatic shut off in the event of water failure supply
- Ceramic disc technology for long life & smooth operation

Technical Drawing

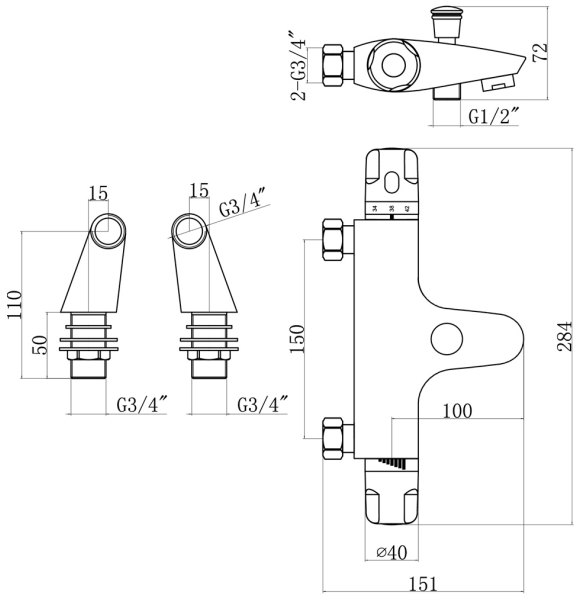

Dimensions: All measurements are in millimetres and are subject to normal manufacturing variations.

Due to a continuing development programme to improve design and performance, we reserve all rights to vary specifications without prior notice. Please note, all accessories are for photographic purposes only.