Technical Datasheet

Product Code: **BET031301**

Product Description: **Ideal Standard Tesi 450mm 1 Tap Hole Handrinse Basin**

Specification

Product Guarantee:	Lifetime
Barcode:	8014140437208
Made In the UK:	Yes
Projection (mm):	360
Material:	Vitreous China
Style:	Modern
Shape:	Rectangular
Number Of Tap Holes:	1

Key Features

- Wide-ranging bathroom ceramic collection with modern expressive design
- Manufactured from high quality white vitreous china
- Features 1 tap hole suitable for mono basin mixer use
- Overflow included to prevent any bathroom accidents
- Designed for use with semi or full pedestal
- Matching sanitaryware are also available in the Tesi range

Technical Drawing

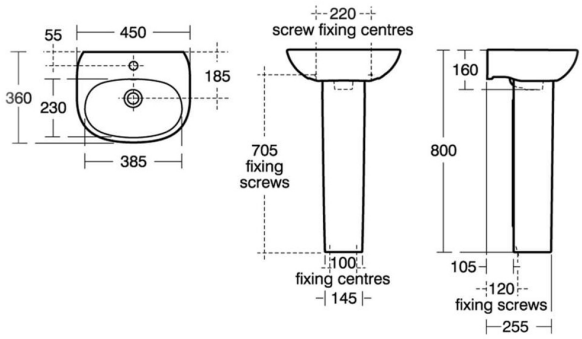

Dimensions: All measurements are in millimetres and are subject to normal manufacturing variations.

Due to a continuing development programme to improve design and performance, we reserve all rights to vary specifications without prior notice. Please note, all accessories are for photographic purposes only.