Code:	BN5

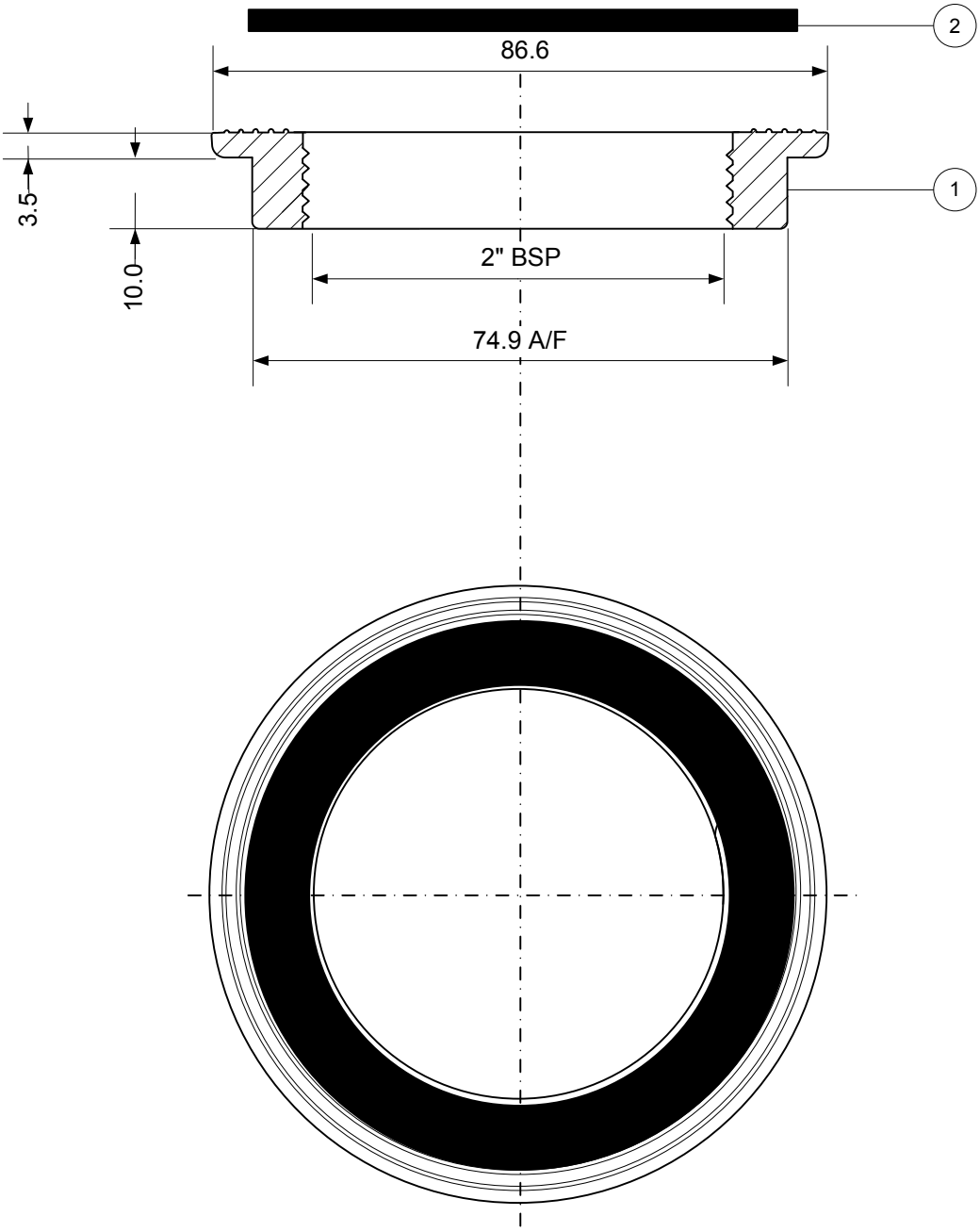

Part No.	Code
1	BN5BACKNUT
2	RWW8

Drawing verified correct as of:	08/03/2010 RM	DRAWN BY RM	REVISED 20/07/2009	FILENAME BN5.VSD
			SCALE 1: 1	DATE 08/03/2010