Technical Datasheet

Product Code: **23701SCH30LL**

Product Description: **ARLEY School Pan Infant 30cm LL**

Specification

Product Guarantee:	Lifetime
Barcode:	5056474523663
Packaged Weight (kg):	9.3 kg
Material:	Vitreous China
Projection:	480
Style:	Modern
Made In the UK:	Yes
Approvals:	CE Approved
Includes Seat:	No

Key Features

- Wide-ranging bathroom furniture collection with modern expressive design
- Manufactured from quality white vitreous china
- Ideally designed for pre school & infant schools
- Back to wall option is also available from this range
- Optional seat is available from this range

Technical Drawing

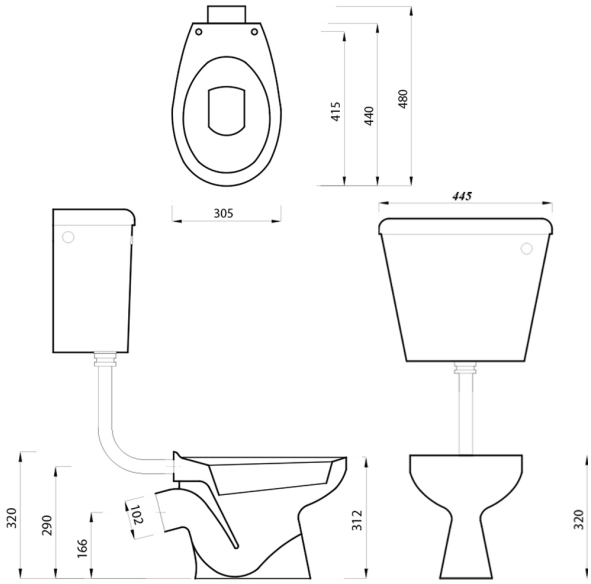

Dimensions: All measurements are in millimetres and are subject to normal manufacturing variations.

Due to a continuing development programme to improve design and performance, we reserve all rights to vary specifications without prior notice. Please note, all accessories are for photographic purposes only.