Technical Datasheet

Product Code: **BAS304701**

Product Description: **Armitage Shanks Contour 21 355mm Close Coupled Back To Wall Pan**

Specification

Product Guarantee:	Lifetime
Barcode:	5017830379898
Packaged Weight (kg):	16.3 kg
Material:	Vitreous China
Projection:	420
Style:	Modern
Includes Seat:	No

Key Features

- Wide-ranging bathroom furniture collection with modern expressive design
- Manufactured from high quality white vitreous china
- Designed for school use ages 7-11 years
- Optional seats are available to purchase separate
- Matching sanitaryware is available from the Contour 21 range
- Alternatively available in 305mm

Technical Drawing

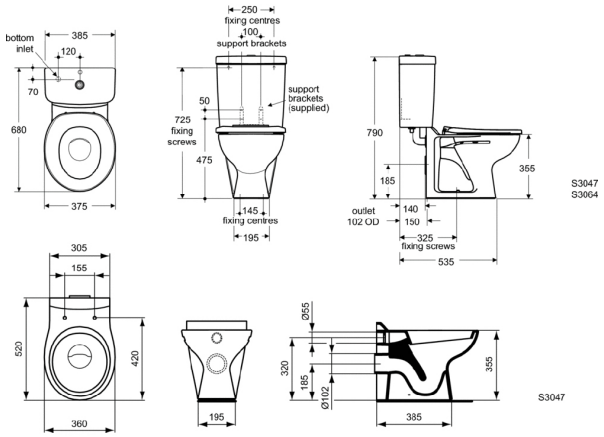

Dimensions: All measurements are in millimetres and are subject to normal manufacturing variations.

Due to a continuing development programme to improve design and performance, we reserve all rights to vary specifications without prior notice. Please note, all accessories are for photographic purposes only.