Technical Datasheet

Product Code: **SY-TIL09**

Product Description: **Synergy Tilly Rimless Wall Hung Pan**

Specification

Product Guarantee:	Lifetime
Barcode:	5056474506185
Packaged Weight (kg):	26.5 kg
Material:	Vitreous China
Projection:	550
Style:	Modern
Includes Seat:	No

Key Features

- Wide-ranging bathroom furniture collection with modern expressive design
- Vitreous china's smooth, elegant, naturally stain resistant quality helps stand the test of time
- Wall hung pan maximises floor space & makes cleaning easier
- Rimless technology makes it easier to clean & reduces limescale build up
- Matching sanitaryware is also available in the Tilly range

Technical Drawing

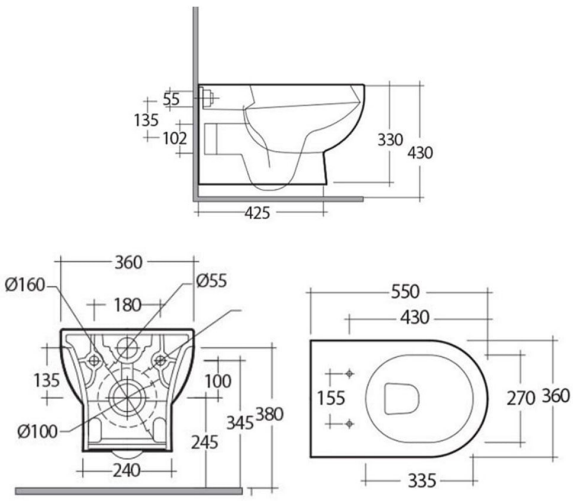

Dimensions: All measurements are in millimetres and are subject to normal manufacturing variations.

Due to a continuing development programme to improve design and performance, we reserve all rights to vary specifications without prior notice. Please note, all accessories are for photographic purposes only.