Technical Datasheet

Product Code: **VES12070G**

Product Description: **Veloce Uno Rect Shower Tray 700X1200mm Grey**

Specification

Material:	Polymarble
Style:	Modern
Shape:	Rectangle
Colour:	Grey
Barcode:	5056474517723
Product Length (mm):	700
Product Width (mm):	1200
Product Height (mm):	35

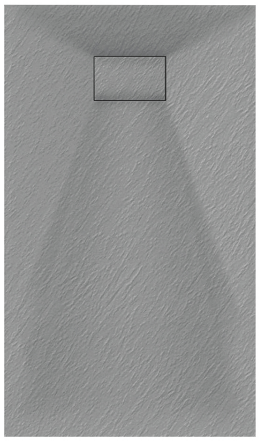

Key Features

- Create an aesthetic that is part of the constantly evolving contemporary style of present day
- Manufactured from high quality polymarble for extra strength & rigidity
- Suitable for installation with both enclosures & wetroom panels
- All the trays feature a low profile of 26mm
- Available in a variety of sizes with 3 optional colour finishes

Technical Drawing

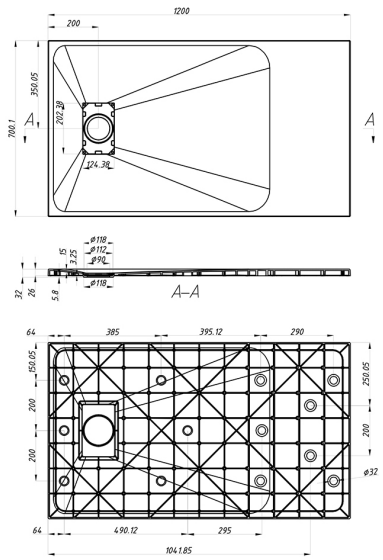

Dimensions: All measurements are in millimetres and are subject to normal manufacturing variations.

Due to a continuing development programme to improve design and performance, we reserve all rights to vary specifications without prior notice. Please note, all accessories are for photographic purposes only.