Technical Datasheet

Product Code: **VES12080W**

Product Description: **Veloce Uno Rect Shower Tray 800X1200mm White**

Specification

Barcode:	5056474517860
Product Length (mm):	800
Product Width (mm):	1200
Product Height (mm):	35

Key Features

- All the trays feature a low profile of 26mm

Technical Drawing

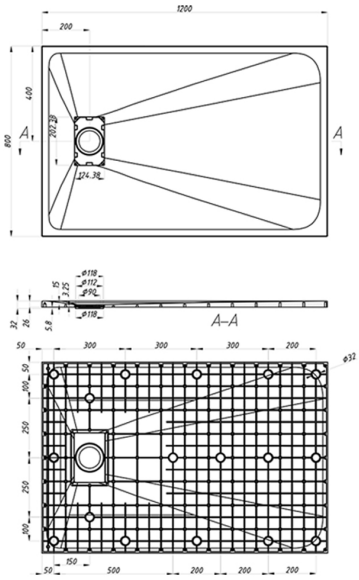

Dimensions: All measurements are in millimetres and are subject to normal manufacturing variations.

Due to a continuing development programme to improve design and performance, we reserve all rights to vary specifications without prior notice. Please note, all accessories are for photographic purposes only.