Technical Datasheet

Product Code: **RSTPED**

Product Description: **RAK Resort Full PED**

Specification

Product Guarantee:	25 Years
Barcode:	5056176002565
Material:	Vitreous China
Style:	Modern
Shape:	Round

Key Features

- Wide-ranging bathroom collection with modern expressive design
- The natural raw materials make ceramic hard wearing, scratch-proof & resistant to limescale
- Designed to help conceal unsightly pipework
- Floor mounted design ideal for a fresh & tidy finish
- Matching sanitaryware is also available in the Resort range

Technical Drawing

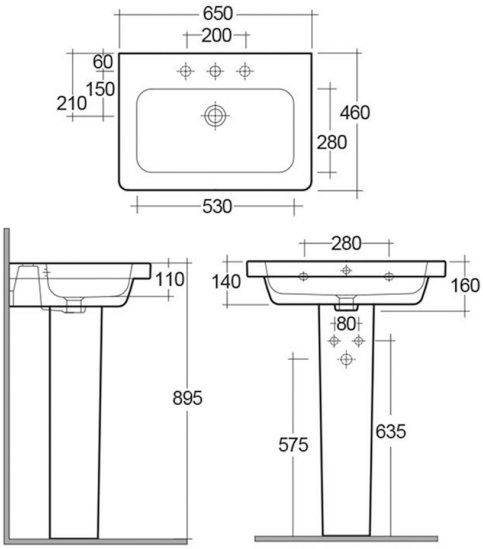

Dimensions: All measurements are in millimetres and are subject to normal manufacturing variations.

Due to a continuing development programme to improve design and performance, we reserve all rights to vary specifications without prior notice. Please note, all accessories are for photographic purposes only.