Technical Datasheet

Product Code: **VENURI**

Product Description: **RAK Venice Waterless Urinal**

Specification

Product Guarantee:	25 Years
Barcode:	5056176003098
Packaged Weight (kg):	16 kg
Material:	Vitreous China
Projection:	355
Style:	Modern

Key Features

- Waterless which means that it does not require a flushing cistern
- The natural raw materials make ceramic hard wearing, scratch-proof & resistant to limescale
- Space saving design ideal for wall mounting
- Suitable for domestic & commercial use

Technical Drawing

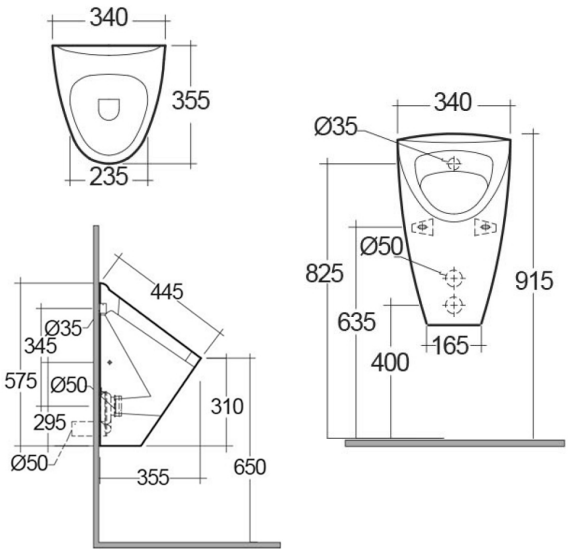

Dimensions: All measurements are in millimetres and are subject to normal manufacturing variations.

Due to a continuing development programme to improve design and performance, we reserve all rights to vary specifications without prior notice. Please note, all accessories are for photographic purposes only.