# Technical Datasheet

Product Code: **70073150001**

Product Description: **Wirquin 73150001 SP1104 Mark Exten Connector**

## Specification

| | |
|---|---|
| Range Name: | Wirquin |
| Barcode: | 3375536033592 |
| Packaged Weight (kg): | 0.083 kg |
| Packaged Length (Metre): | 0.19 |
| Packaged Width (Metre): | 0.04 |
| Packaged Height (Metre): | 0.24 |

## Key Features

None Specified.

## Technical Drawing

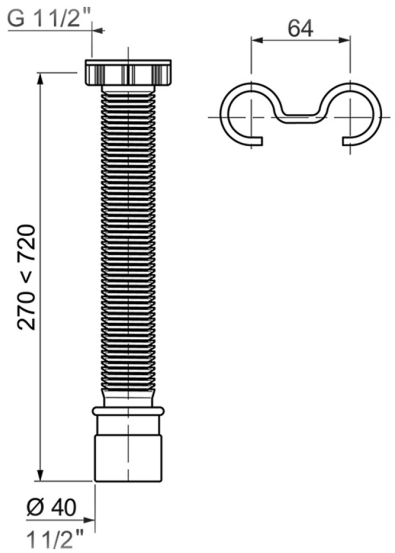


Dimensions: All measurements are in millimetres and are subject to normal manufacturing variations.

Due to a continuing development programme to improve design and performance, we reserve all rights to vary specifications without prior notice. Please note, all accessories are for photographic purposes only.